Power plants and electric circuits Progressive test 1

Instructions for students: Follow your teacher's instruction. Also you can attempt this test online and see your result.

Attempt online and know results

Topic: Power plants and electric circuits
Dates: 05.10.2022 until unlimited
Question count: 3
Total marks: 13

1. Current and electric circuit (3 m.)

Read the statement and choose the right answer:

1. If a switch is 'ON', then a current can flow through the circuit.

A) True
B) False

2. Electricians does not wear rubber gloves to avoid electric shock while repairing.

A) False
B) True

Click to view solution for similar question online

View solution

2. Conductors and insulators-In general (5 m.)

Match the right answer for the given image:

A) Conductor
B) Insulator
C) Electrical component

Image	Answer
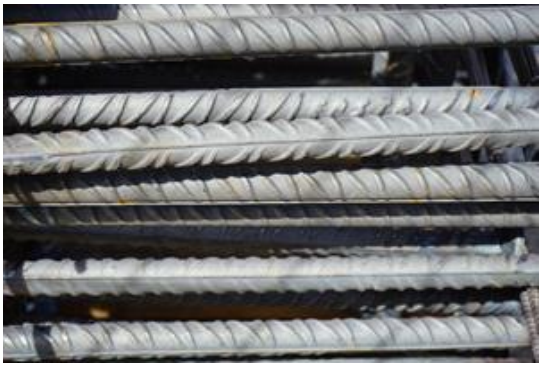	.....
	.....

.....

Click to view solution for similar question online

View solution

3. Series and parallel connection (5 m.)

Look the image carefully and choose the right answer

A) Series connection
B) Parallel connection
C) Both parallel and series connection

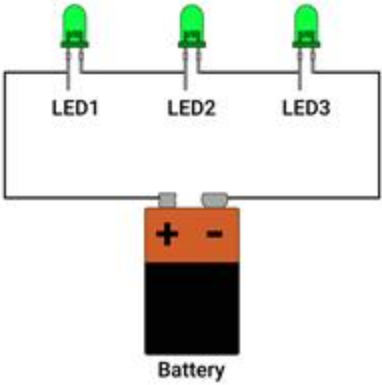

The bulbs are connected in .....

Give reason for the selection (**100-150 words**):

.....

Click to view solution for similar question online

View solution